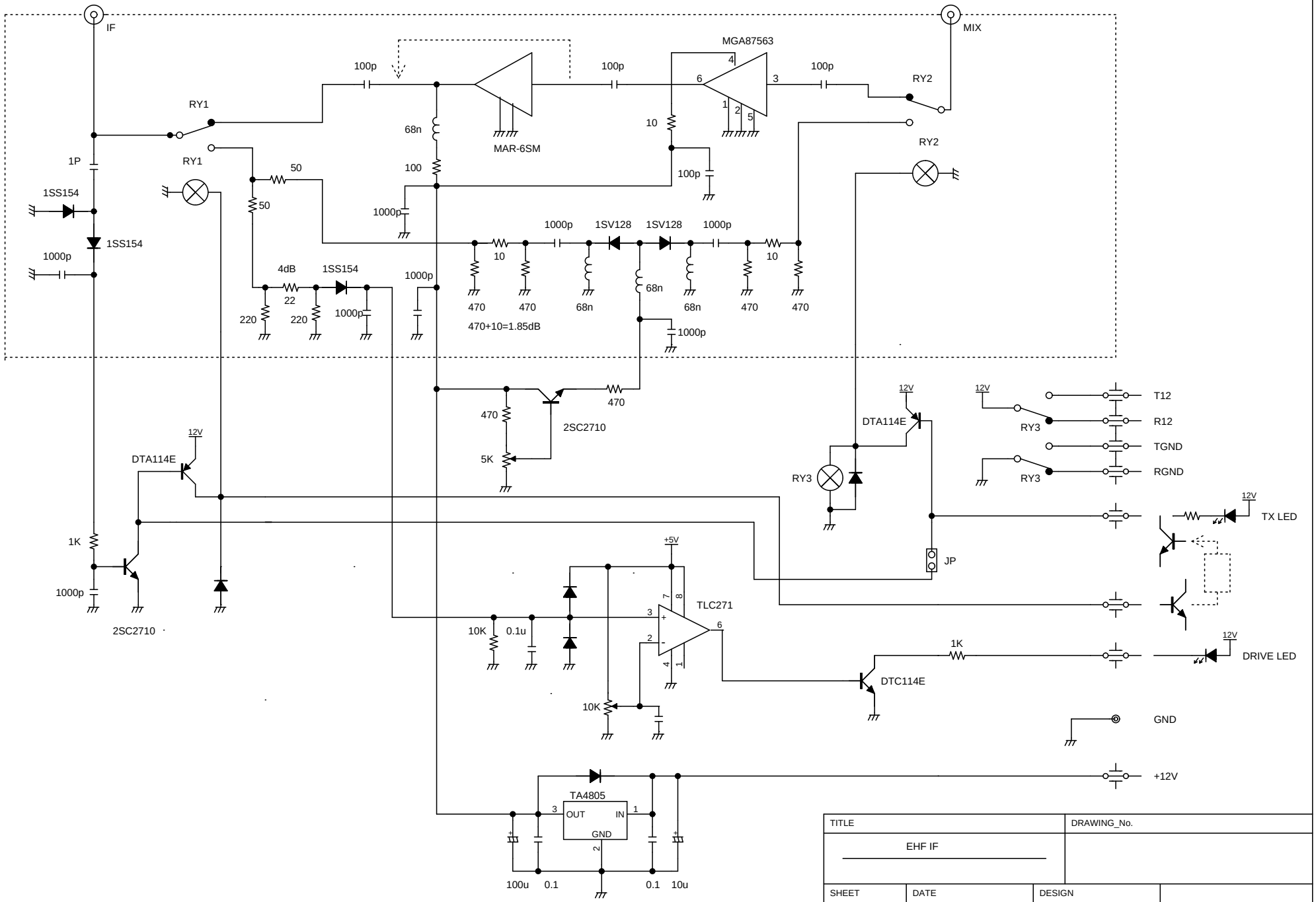

TITLE	DRAWING_No.	
EHF IF		
SHEET	DATE	DESIGN
/	DEC.27.2004	